CSCLED

PRODUCT CODE(S):	
NOTES:	
TYPE:	

Interactive PDF. Click to type.

TITAN Sports Lights

Power Selectable | 5000K | 120-347V

Premium, versatile sports lighting delivering powerful, reliable illumination for sports fields, coastal environments, security areas, and high ceilings!

Remote Driver Mount Ability

Power Selectable
3 power settings per fixture

120-347V Universal Driver
for quick installation and access

Magnetic Laser
sold separately

Tool Free Driver Box

4 Beam Angle Options
interchangeable Optics sold separately

Pre-installed Yoke Mount Standard
additional mounting sold separately

High Bay Mount Option

Photocell Receptacle Built-in

1000-hour Salt Spray Endurance
per ASTM B117

5 YEAR WARRANTY · eco · IP66 · DLC LISTED PREMIUM · 120-347V · IK08

LIGHT SPECIFICATIONS AND ELECTRICAL

PRODUCT CODE	SELECTABLE WATTS	CCT	LUMENS	EFFICACY	V	FACTORY SETTINGS	MAX CURRENT	CRI
SPT-600W-3P-50K-30D-UD-GR	400W	5000K	68,000 lm	170 lm/W	120-347V	600W	5A	70+
	500W		85,000 lm	170 lm/W				
	600W		102,000 lm	170 lm/W				
SPT-900W-3P-50K-22D-UD-GR	700W	5000K	119,000 lm	170 lm/W	120-347V	900W	7.5A	70+
	800W		136,000 lm	170 lm/W				
	900W		153,000 lm	170 lm/W				

SPECIFICATIONS & ELECTRICAL

Surge Protection	6kV
Power Factor	>0.9
Auxiliary Output	12V
THD	<20%
Operating Temp	-40°C to 45°C
Beam Angle	600W: 30° 900W: 22°
Dimmable	0-10V
L70 Life	>50,000 hrs
Warranty	5-year

APPROVALS & RATINGS

cUL	E482965
CAN ICES-005	Yes
IP Rating	IP66
IK Rating	IK08
Salt Spray	ASTM B117, 1000 hours

CONSTRUCTION

Housing	Die-cast Aluminum
Lens	Polycarbonate
Finish	Powder Coated, C4 Corrosion-Resistant
Finish Colour	Grey
Power Cord Length	6'

600W

900W

DLC INFORMATION

PRODUCT CODE	PRIMARY USE	DLC ID	CLASSIFICATION
SPT-600W-3P-50K-30D-UD-GR	Sports Lighting	S-CS7ZW9	Premium
	High-Bay Luminaire	S-RL7RK6	Premium
SPT-900W-3P-50K-22D-UD-GR	Sports Lighting	S-WXHVZ4	Premium
	High-Bay Luminaire	S-SDD76H	Premium

EPA VALUES

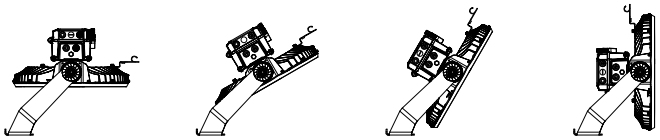

PRODUCT NUMBER	Installation Type	Installation Angle 0°	Installation Angle 30°	Installation Angle 60°	Installation Angle 90°
SPT-600W-3P-50K-30D-UD-GR	SPT fixture with driver box; without visor	0.865	1.485	1.577	1.608
	SPT fixture with driver box; with visor	1.719	1.605	1.584	1.621
	SPT fixture without driver box; without visor	0.394	1.017	1.469	1.607
	SPT fixture without driver box; with visor	1.245	1.239	1.508	1.621
SPT-900W-3P-50K-22D-UD-GR	SPT fixture with driver box; without visor	0.994	1.764	2.033	2.218
	SPT fixture with driver box; with visor	2.166	1.948	2.056	2.237
	SPT fixture without driver box; without visor	0.512	1.354	2.007	2.212
	SPT fixture without driver box; with visor	1.684	1.582	2.042	2.231

ACCESSORIES (Sold Separately)

		SHADED CELLS INDICATE COMPATIBILITY	
PRODUCT NUMBER	PRODUCT NAME	SPT-600W-3P-50K-30D-UD-GR	SPT-900W-3P-50K-22D-UD-GR
SPT-MM-LG-GR	Multi Mount - LARGE (High Bay, Surface, Pendant),		
SPT-MM-XL-GR	Multi Mount - EXTRA LARGE (High Bay, Surface, Pendant),		
SPT-SF-GR	Slip Fitter Mount		
SPT-CM-GR	Clamp Mount		
SPT-VISOR-LG-GR	Visor - Large		
SPT-VISOR-XL-GR	Vison - Extra Large		
SPT-LASER	Laser		
SPT-22D-LG	22° Optics - Large		
SPT-30D-XL	30° Optics - Extra Large		
SPT-45D-LG	45° Optics - Large		
SPT-45D-XL	45° Optics - Extra Large		
SPT-60D-LG	60° Optics - Large		
SPT-60D-XL	60° Optics - Extra Large		
SPT-EXC-80FT	Extension Cord - 80'		
SPT-EXC-60FT	Extension Cord - 60'		
SPT-RDM	Remote Driver Mount		
JL-711A1	Zhaga Book 18 Photocell		
JL-711A2	Zhaga Book 18 Photocell, Midnight Dimming Function		

See page 4 for accessory photos

Clamp Mount

Extension Cord

Multi Mount

Remote Driver Mount

Slip Fitter Mount

Visor

Laser
Quick, magnetic design for precision aiming

Shown on 900W model

MEASUREMENTS (IN) & WEIGHTS (LBS)

SPT-600W-3P-50K-30D-UD-GR

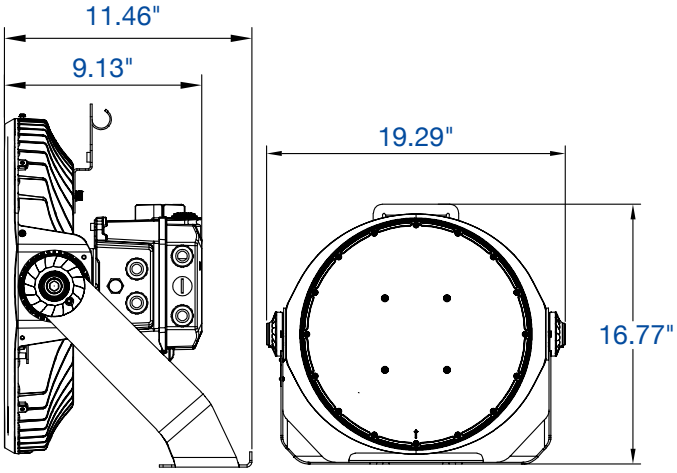

Product Meas.	16.77" x 19.29" x 11.46"
Fixture Weight	33.29 lbs (including Driver) 19.66 lbs (excluding Driver)
Carton Qty	1
Carton G.W.	33.95 lbs
Carton Meas.	22.44" x 20.47" x 10.43"

SPT-900W-3P-50K-22D-UD-GR

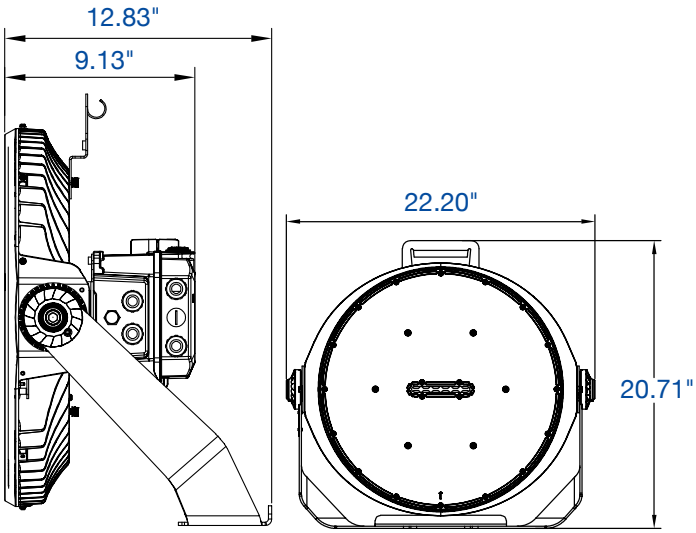

Product Meas.	20.71" x 22.20" x 12.83"
Fixture Weight	47.40 lbs (including Driver) 30.99 lbs (excluding Driver)
Carton Qty	1
Carton G.W.	47.84 lbs
Carton Meas.	26.38" x 24.02" x 10.63"